RoHS

REV	ECN NO.	DESRIPTION	DESIGN	APPROVAL	DATE
A1	NEW	更换图框			2024.05.24

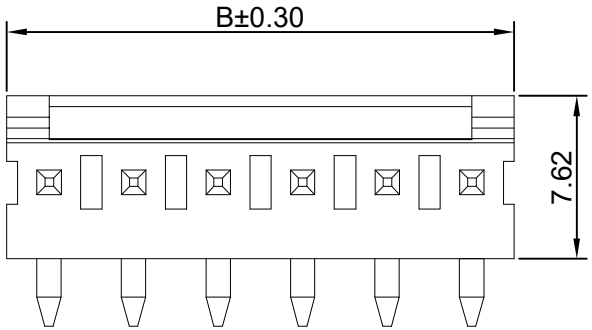

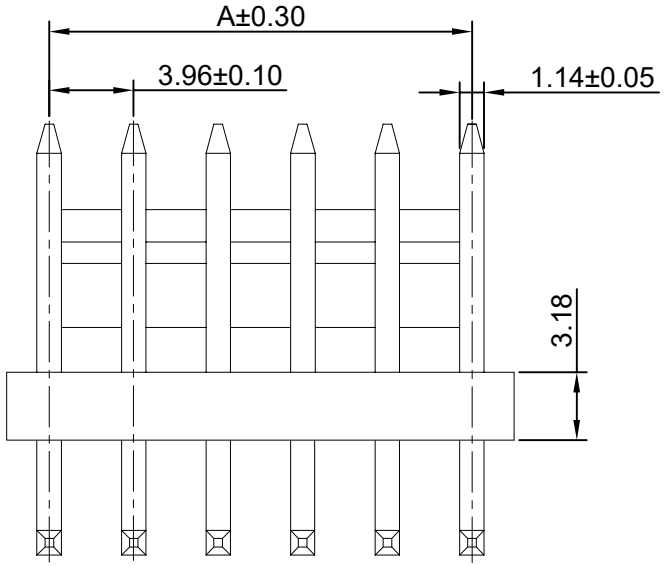

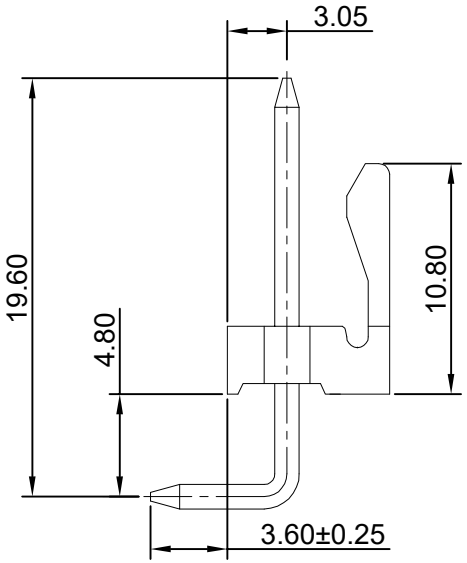

SPECIFICATIONS
1. Current rating: 5A
2. Temperature range: -40°C ~ +105°C
3. Insulation resistance: 1000MΩ Min.
4. Withstanding voltage: 1500V AC/ minute.
5. Contact resistance: 20mΩ Max.

Material:
Insulator Material:PA66 UL94V-0
Contact Material:Brass
Contact Plating:Tin-Plated
Mate with XFCN P3965 series Housing

Ordering Code:
M3965R-XX
1 2
1.序列号
2.Pin位数: 02-16P

No.of PIN/ROW	Dimension A	Dimension B
02	3.96	7.92
03	7.92	11.88
04	11.88	15.84
05	15.84	19.80
06	19.80	23.76
07	23.76	27.72
08	27.72	31.68
09	31.68	35.64
10	35.64	39.60
11	39.60	73.56
12	43.56	47.52
13	47.52	51.84
14	51.48	55.44
15	55.44	59.40
16	59.40	63.36

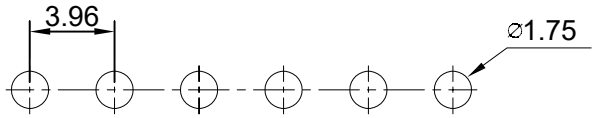

P.C.B LAYOUT

X.±0.50	X.°±	PART NO: M3965R-XX	XFCN兴飞连接器
.X±0.25	.X°±		
.XX±0.15	.XX°±	TITLE: 3.96mm Crimp Style Connectors	0769-82001899
.XXX±0.10	.XXX°±		www.xfconn.com
UNITS:	mm		DWG NO: /

APPD	Chen ZhiQiang			
CHKD	Liu Wei	VIEW		
DRAW	Chen HongJiang	SCALE	SHEET	REV
DATE	2024.06.13	NONE	1/1	A1

THESE DRAWINGS AND SPECIFICATIONS ARE THE PROPERTY OF XFCN AND SHALL NOT BE REPRODUCED,COPIED OR CUED IN ANY MANNER WITHOUT THE PRIOR WRITTEN CONSENT OF XFCN